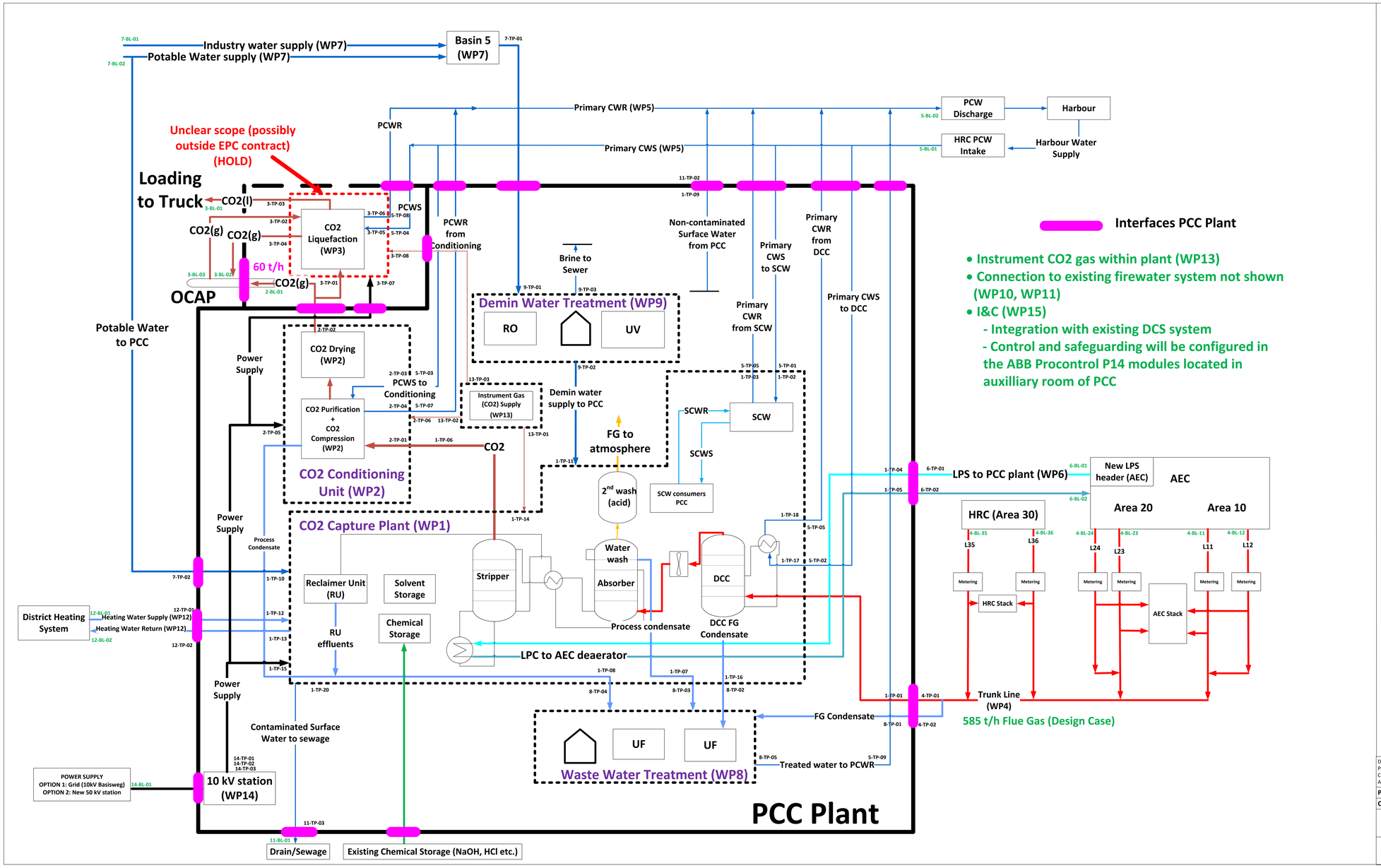

Date	:	16 February 2023
Prepared by	:	THAX
Checked by	:	VEFR
Approved by	:	VEFR

Project Title: AEB CO2 Capture BOD and Tender Specifications

Client: AEB Amsterdam

Title
Overall Block Flow Diagram

Advisian Worley

Drawing Number
416041-47990-B-01-001, Rev A